Tacx

T1930 Fortius Multiplayer 220V/50Hz
T1935 Fortius Multiplayer 110V/60Hz

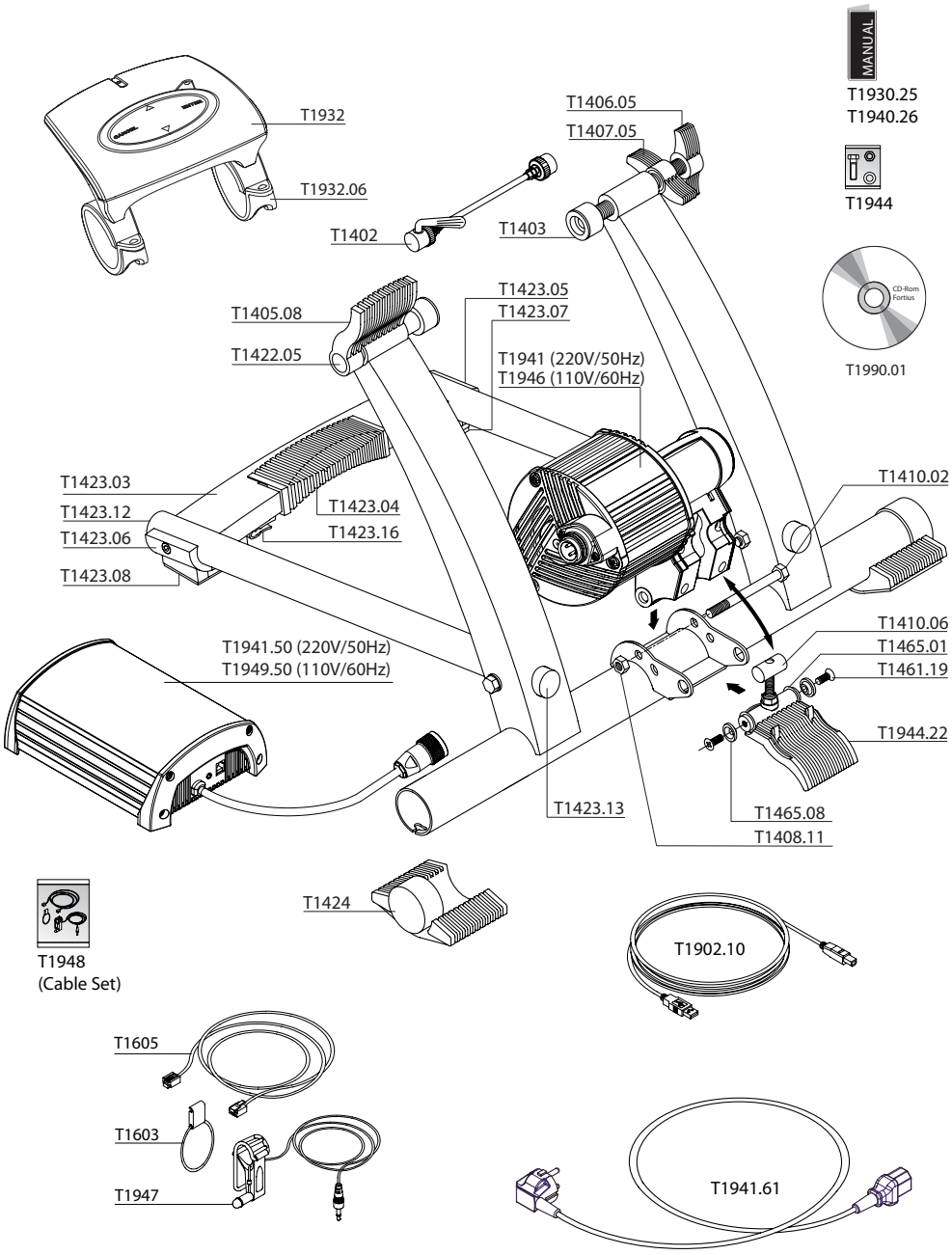

T1466 Unit Mounting Adapter Set
for bikes with wheeldiameters of
610 - 640 & 690 - 720 mm

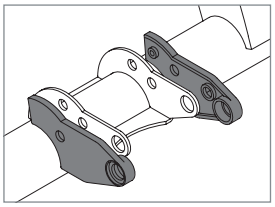

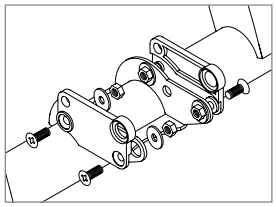

T1905 VR Steeringframe

Spare Parts

T1402	Quick Release, rear wheel
T1403	Quick release holder
T1405.08	Lever, blue
T1406.05	Bolt M16 with nut
T1407.05	Wing nut, M16
T1408.11	Lock nut, M8
T1410.02	Bolt, M8 x 85
T1410.06	Spacer, M8
T1422.05	Movable piece
T1423.03	Front leg
T1423.04	Slide
T1423.05	Sidefoot, right
T1423.06	Sidefoot, left
T1423.07	Rubber sole, right
T1423.08	Rubber sole, left
T1423.12	End cap, round 30 mm
T1423.13	End cap, round 25 mm
T1423.16	Cable clip
T1424	Foot CycleForce
T1461.19	Screw, M6 x 12
T1465.01	Rubber ring
T1465.08	Washer for hinge
T1466	Unit mounting adapter set
T1603	Magnet complete
T1605	Cable
T1902.10	USB cable, 3 metres
T1905	VR Steering frame
T1930.25	Manual Fortius Multiplayer
T1932	VR interface
T1932.06	Handlebar clamp VR interface
T1990.01	Tacx Trainer software
T1940.26	Brief instructions Fortius
T1941	Motorbrake 220V/50Hz
T1941.50	Motorbr. adaptor 230V/50Hz
T1941.61	Powercable
T1944	Fitting kit Fortius
T1944.22	Quick release complete, blue
T1949.50	Motorbr. adaptor 110V/60Hz
T1946	Motorbrake 110V/60Hz
T1947	Sensor cadence long
T1948	Cableset

Packaging

T1930	59 x 55 x 18 cm	18,52 kg

T1905 Steering frame

T1905.25

T1909

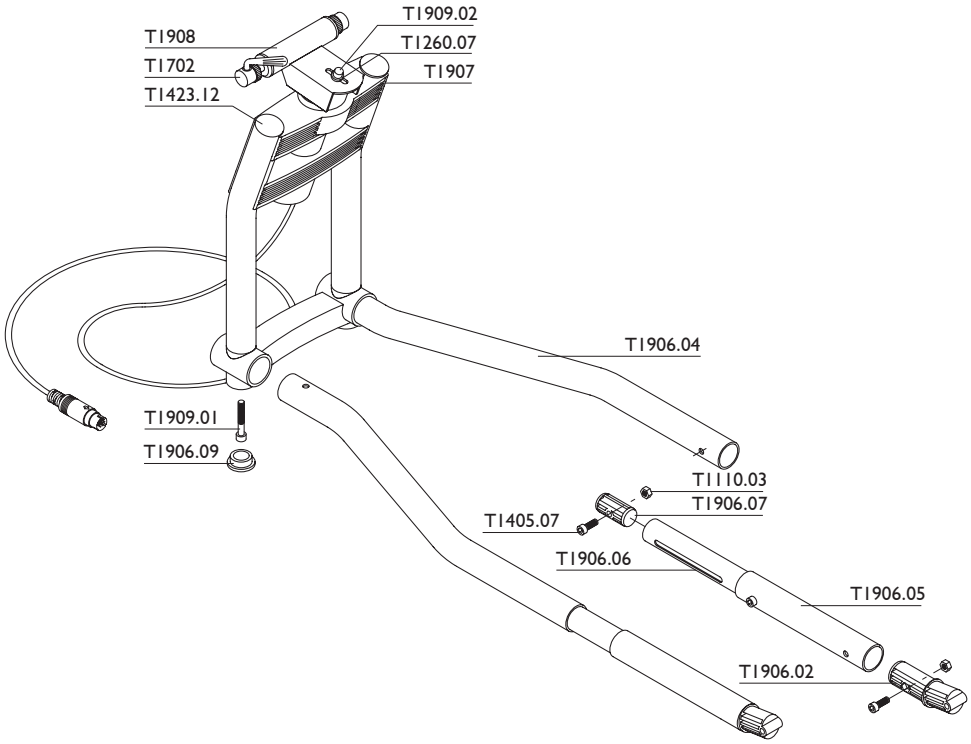

Spare Parts

T1110.03	Nut, M6
T1260.07	Large washer, M6
T1405.07	Screw, M6 x 25/15
T1423.12	End cap, round 30 mm
T1702	Quick release, frontwheel
T1905.25	Manual VR steering frame
T1906.02	Coupling
T1906.04	Bent tube VR steering frame
T1906.05	Tube VR steering frame
T1906.06	Adjusting tube VR st.frame
T1906.07	Retaining nut
T1906.09	Anti-slip sealing ring
T1907	Steering assembly complete
T1908	Fork holder
T1909	Fitting kit VR steering frame
T1909.01	Screw, M6 x 45
T1909.02	Screw, M6 x 15

Packaging

T1905	52,7 x 31,5 x 12,5 cm	4,82 kg